DAIKIN

CAT.6E

CENTRALIZED LUBRICATING SYSTEM

KM.AKA.AKAC

Single Line

KM (Manually Operated Grease Pump)

AKA. AKAC (Motor Driven Grease Pump)

DAIKIN LUBRICATION PRODUCTS & ENGINEERING CO.,LTD.

Single Line Centralized Lubricating System

SINGLE LINE SYSTEM

In recent years, large-scale manufacturing equipment and facilities such as steel machinery has steadily been growing in complexity and size. These facilities have an enormos number of lubrication points, and the conditions required for lubrication are becoming more severe under operating conditions such as high speeds, high loads, and extended operation. The single line system is widely adopted as the most efficient and reliable centralized lubricating system capable of automatically supplying an appropriate amount of lubrication even in such a harsh environment.

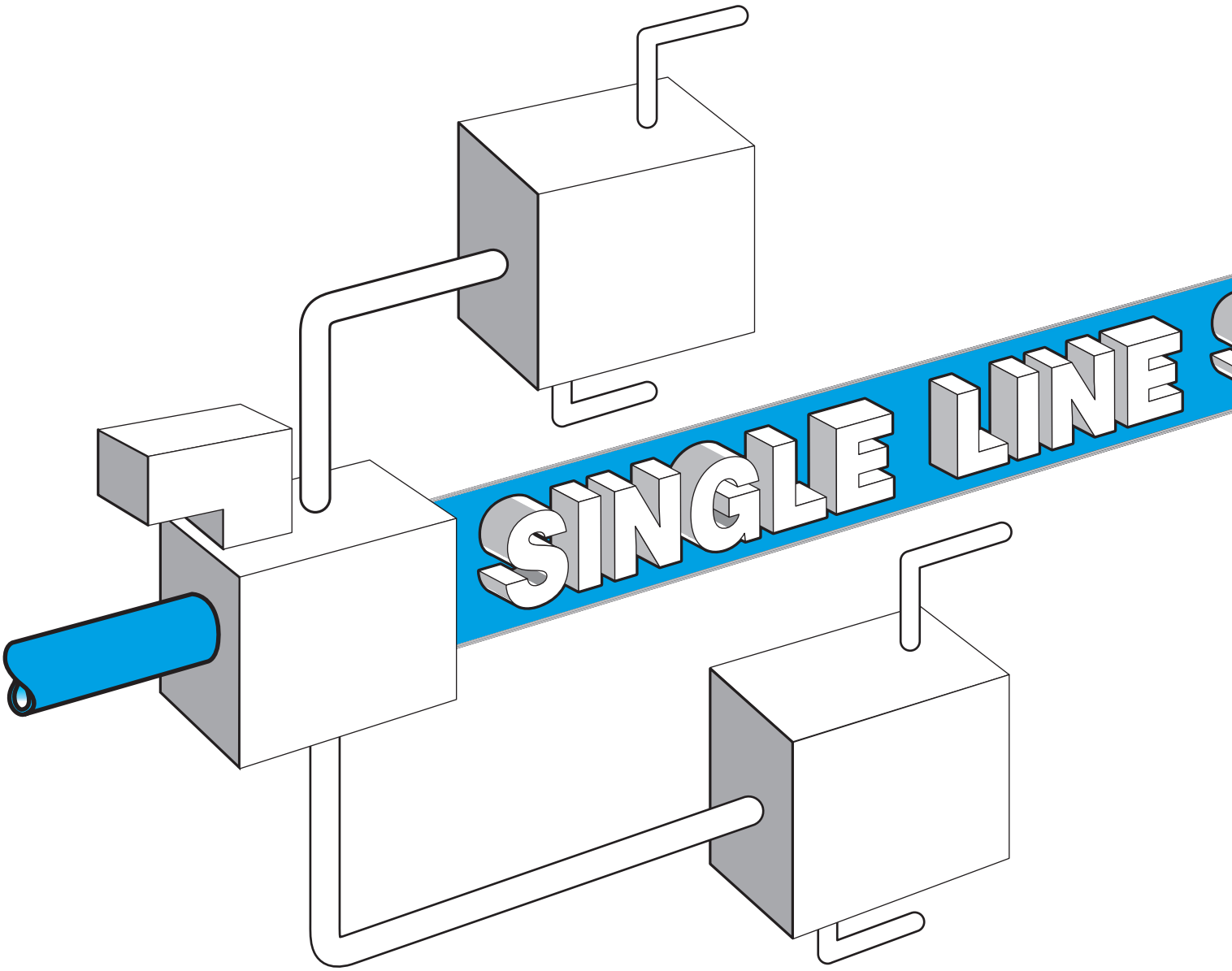

●What is a "Single Line Centralized Lubricating System?"

This lubrication system consists of one pump and progressive operating typed distributing valves connected by a single piping line, which can accommodate small to large sized equipment and facilities. Lubrication can be performed accurately by planning the lubricating amount for each individual bearing in advance.

Max. number of lubricating ports
2000
lubrication points

■Selection of lubricating amount
The appropriate lubricating amount can be set by selecting the distributing valve element.

■Relaiable proportional distribution
The set lubrication amount does not change regardless of environmental factors such as type of bearing, resistance and temperature.

■System operation assurance
Operation is assured by the progressive operation system.

■Simple piping
Supply pipe is a single pipe, which allows piping to narrow locations easily.

SYSTEM

●Operating principle of Progressive Operation System

With the progressive operation system, the discharge supply line is connected to the 1st stage piston, and the passages to the other pistons are blocked by respective pistons upstream.

Accordingly, when the 1st stage piston is pushed down by the lubricant sent from the discharge supply line to finish lubrication, the passage to the 2nd stage piston opens to start lubrication.

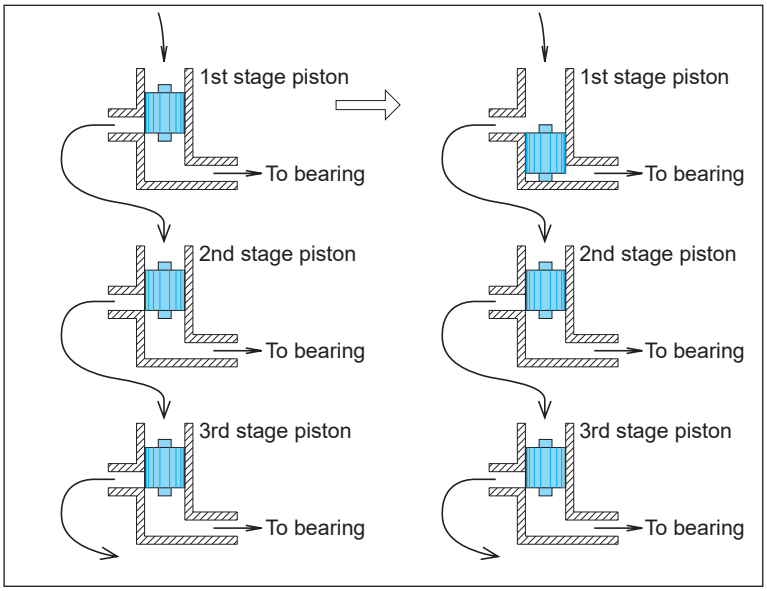

When the lubrication at 2nd stage piston ends, the passage to the 3rd stage piston opens to perform lubrication.

In this way, since lubrication is performed sequentially in this system, even bearings that have considerably different lubrication resistance can be reliably lubricated, and lubrication can be easily checked at one location.

KM type Manually Operated Grease Pump

High pressure manually operated pump of 21MPa with light handle operation

KM

■Overview

This compact pump is easy to handle, and is best suited to lubricating systems that have short pipes at relatively low lubrication frequency points and that have few lubricating ports.

■Features

●Simplified pipeline

These high-pressure pumps allow the pipe diameter to be made thinner and make lubrication possible in a wider area, which helps to save piping costs.

●Easy Handling and Operation

Compact, easy to handle, light handle operation make it easy for operator to use.

●Tough and Simple Structure

A simple structure and an almost fault-free mechanism reduce the time and effort needed in maintenance.

■Explanation of Model Symbols (Example)

KM − 5 2 A K P − ※※

- Basic model: KM
- Tank capacity: 5
  - 3: 1.6L
  - 4: 2.0L
  - 5: 4L (except 3L for acrylic tank)
- Max. operating pressure: 2
  - No symbol: 10MPa
  - 2: 21MPa
- Lubricant used: A
  - A: Grease
  - B: Oil
- System category: K
  - K: Progressive operation system
- Tank Material: P
  - No symbol: Steel pipe tank
  - 2: Acrylic tank
- Design No.: ※※

■Circuit Diagram

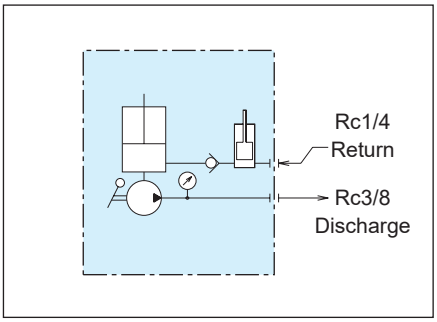

■Specifications

Model symbol	Discharge quantity (cm³/stroke)	Max. operating pressure (MPa)	Tank capacity (L)	Lubricant used	Weight (kg)
KM−42AK	3.5	21	2.0	Centralized lubricating grease NLGI consistency number #0 to #2	18
KM−52AK			4.0		21
KM−32AKP	3.5	21	1.6		15
KM−52AKP			3.0		16
KM−3BKP	7.0	10	1.6	Oil	15
KM−5BKP			3.0		16

Remarks:
- ●Be sure to use this pump indoors.
- ●Use centralized lubricating grease NLGI consistency number #0 to #2.
- ●The grease used shall be unworked with the consistency of 240 or more at the operating temperature.

■Handling

< Charging of grease >

Replenish the tank with grease by using a grease filling pump via the replenishing port . Pay attention to the position of the follower plate rod while replenishing, and stop charging when the upper limit red mark comes into sight.

< When the pump pressure does not come up >

- ●Loosen the air vent screw and release the air.
- ●Confirm if the piping has no leakage.

< When the pump pressure increases rapidly >

In case the pressure suddenly increases when the handle is operated,

- ●Confirm if the distributing valve does certainly work.
- ●Confirm if the piping is choked.

■Dimension Drawing

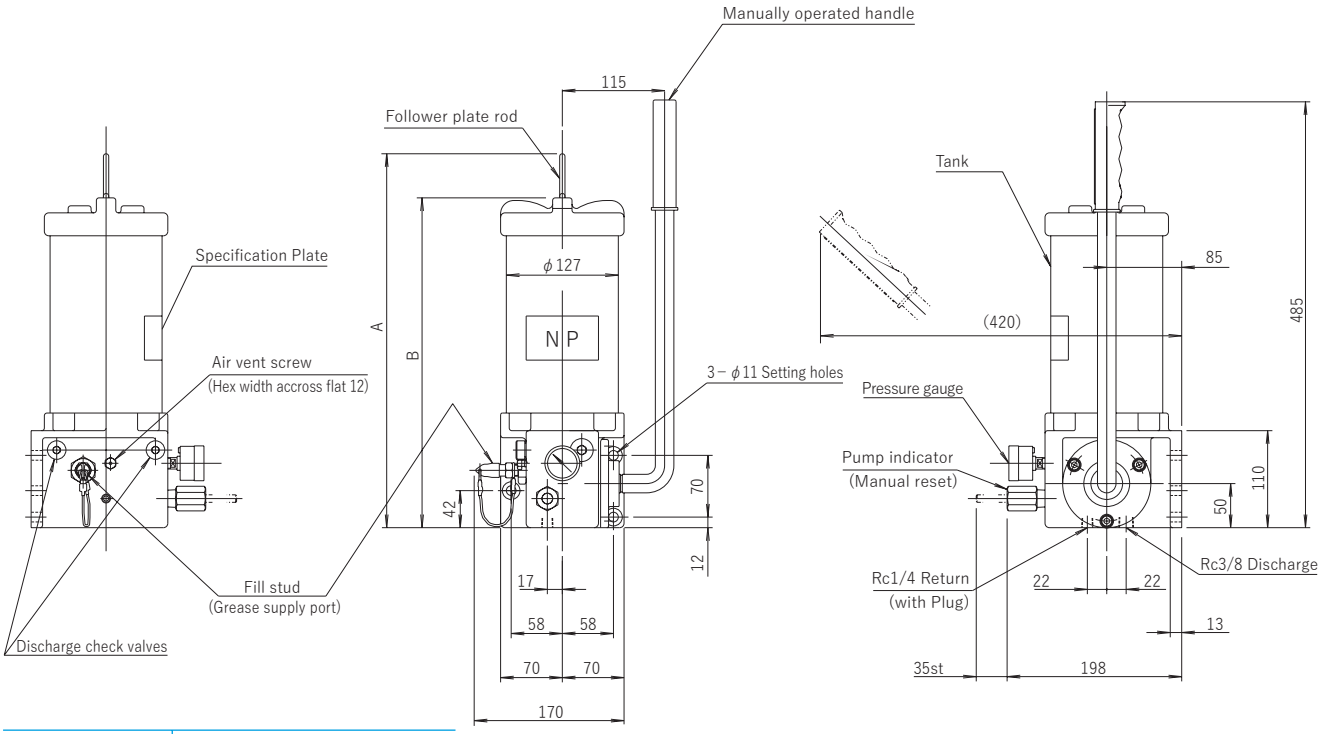

Model	Dimension	
	A (MAX)	B
KM－42AK	550	365
KM－52AK	900	540

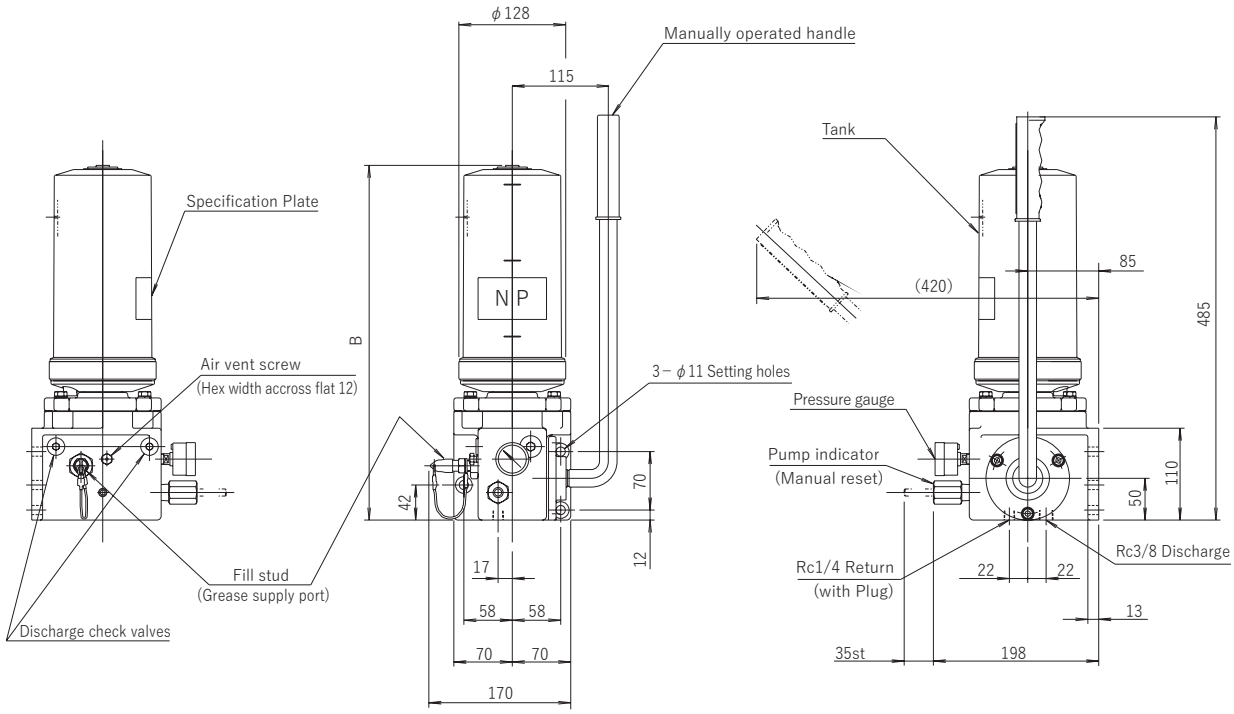

Model	Dimension
	B
KM－32AKP－※※	425
KM－52AKP－※※	532

The figure shows KM-32AKP-※※. KM-52AKP-※※ has a different tank shape.

AKA type Motor Driven Grease Pump

Compact series in pursuit of economy

AKA

■Overview

This motor driven grease pump is used in dual line systems. This automatic lubricating system has been designed to be simple and streamlined, and uses a single-piston pump mechanism which is driven by a geared motor.

AKA－104

AKAC－108AKP

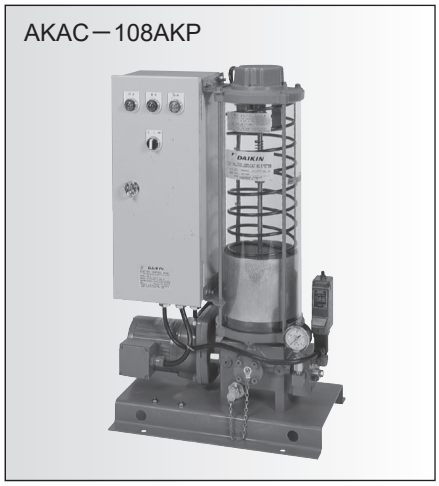

■Features

●Reduced motor capacity by improving efficiency

The electric motor output has been reduced to 1/2 of our conventional type (in-house comparison) by improving the efficiency of the geared motor drive.

●Simple pump mechanism

The non-spring check valve and single-piston pump mechanism enables a simple structure with few failure factors.

●Low-cost automatic lubrication

The pump and control panel are integrated, which enables easy automatic lubrication. In addition, more substantial automatic lubrication can be performed by setting it with a separate standard electric control panel.

■Explanation of Model Symbols (Example)

AKA※ － 1 04 A K P － 20 － ※※

- Basic model
- Electric control panel
  - C: w/ control panel
  - No symbol: w/o control panel
- Discharge quantity size
  - 1: 30/36cm³/min at 50/60Hz
- Tank capacity
  - 04: 4L
  - 08: 8L
  - 15: 15L
  - 25: 25L
- Lubricant used
  - A: Grease
  - B: Oil
- System Category
  - K: Progressive Operation System
- Tank material and control system
  - No symbol: Steel pipe tank, 1-stage low ☆
  - P : Acrylic tank, 1-stage low ☆
  - H : Steel pipe tank, 1-stage low, high
  - PH : Acrylic tank, 1-stage low, high ☆
  - M : Steel pipe tank, 2-stage low, high
- Motor voltage
  - 20: 200/220V AC 50/60Hz
  - 40: 400/440V AC 50/60Hz
- Design No.

Notes) For models with a control panel (AKAC),
- ●Applicable only AKAC-108 type, and control panel typed EK-3(T) is attached.
- ●Only a low level switch can be connected and controlled on the 3(T) typed control panel.
- ●Note that a high level switch cannot be connected. Consult with us when performing high level switch control.
- ●Items marked by "☆" apply only to the AKA-104,108 types.

■Specifications

Model symbol	Discharge quantity (cm³/min) 50Hz	Discharge quantity (cm³/min) 60Hz	Max. operating pressure (MPa)	Electric motor Capacity (kW)	Direction of motor rotation	Tank Capacity (L)	Lubricant used	Weight (kg)
AKA－104AK－※※－※※	30	36	21	0.1 Speed reduction ratio:1/40	Both direction	4	Centralized lubricating grease NLGI consistency number #0 to #2	48
AKA－108AK－※※－※※						8		52
AKA－115AK－※※－※※						15		94
AKA－125AK－※※－※※						25		102
AKA－104AKP－※※－※※						4		41
AKA－108AKP－※※－※※						8		44
AKA－104BKP－※※－※※	30	36	10			4	Oil	37
AKA－108BKP－※※－※※						8		40

Remarks:
- ●The set pressure of the relief valve is; 23MPa for grease, 13MPa for oil.
- ●This pump is for indoor use. When using it outdoors or in places with poor environmental conditions, provide protection such as installation inside a cubicle.
- ●Select NLGI consistency #0 to #2 for centralized lubrication for the grease used. (Note, however, the grease used shall be unworked with the consistency of 240 or more at the operating temperature.)
- ●Foundation bolts are not included.

■Dimension Drawing

AKAC－108AKP

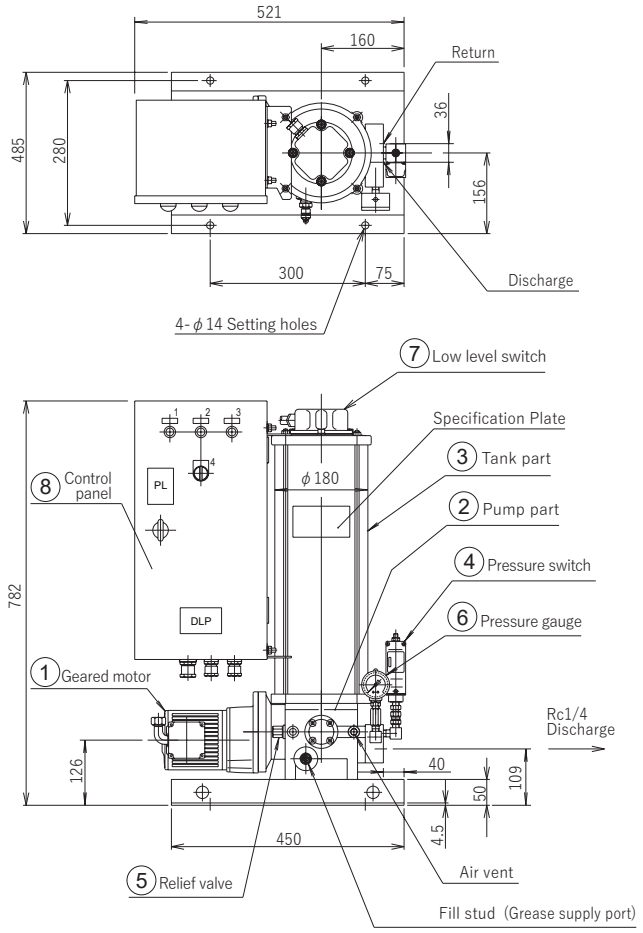

AKA－125AKH

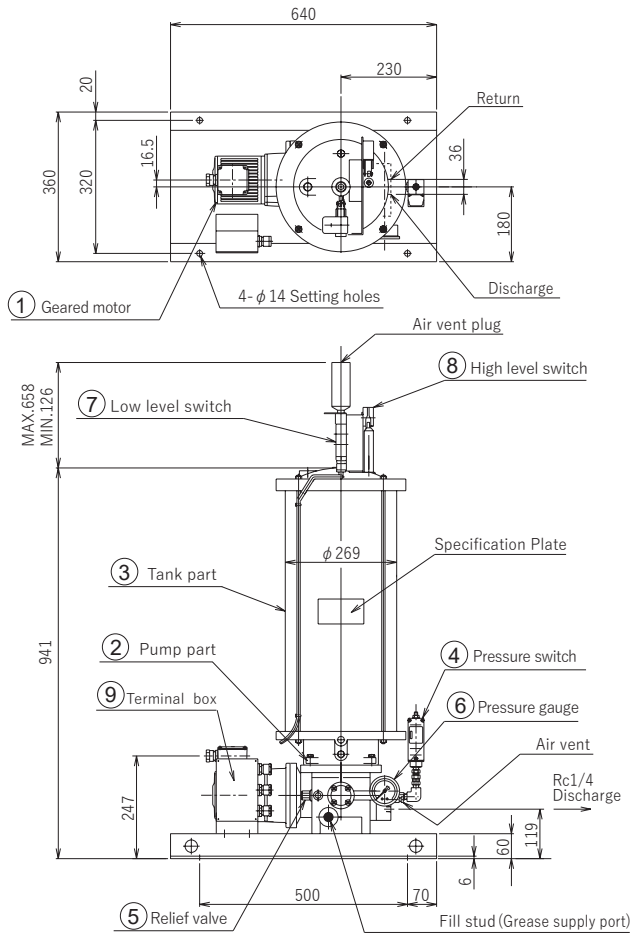

■Unit circuit diagram

AKAC－108AKP

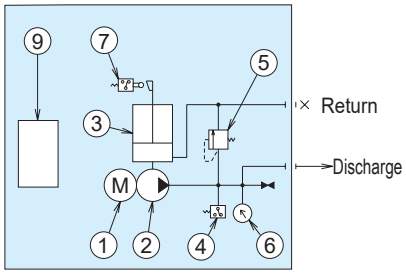

AKA－125AKH

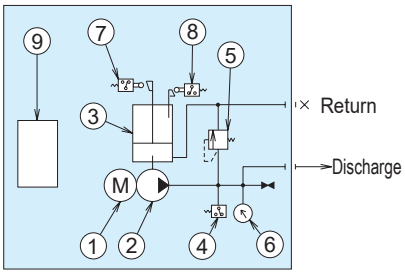

■Terminal connection

AKAC－108AKP

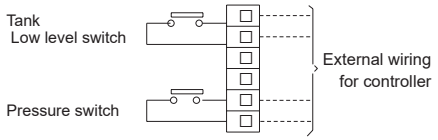

AKA－125AKH

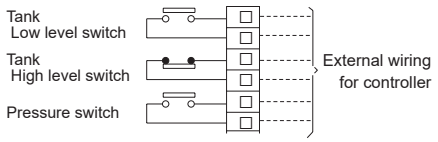

Memo

Memo

When Inquiring With Us

■ Please inform us of the following items when inquiring about lubricating equipment.

1. The overall drawing or a sketch including overall dimentions of the machine equipment
2. Quantity and location of lubrication points
   In particular, please specify the points to be lubricated on the drawing (sketch).
3. Types and characteristics of the above lubrication points
   (a) Types of bearings and sliding parts (flat bearings, ball bearings, etc.)
   (b) Dimensions and number of revolutions
   (c) Whether the lubrication ports are fixed, movable, or rotatable, the movement, and the number of revolutions
   (d) diameter of the lubrication ports' thread
   (e) Special attentions to be paid in determining the amount of lubrication
   (f) Types of lubricants (grease and oil)
4. In case the product will be exposed to high or low temperatures (50°C or higher, 0°C or lower), provide us the detailed information of the environment.
5. Whether it will be for outdoor or indoor, or particular status environment.
6. Planned pump type and control method.
   Pneumatic/hydraulic pump, fully automatic control, semi-automatic control, with/without control panel, with/without spare pump.
7. Plans or instructions for the location of pumps and main pipes.
8. Power supply for motor driven pump control panel (voltage, frequency)
9. Special requirements regarding the control panel (remote display, remote operation, etc.)
10. Specification of drive pneumatic source and hydraulic source
11. Other important points regarding quotations
    (If you do not specify about items 3, 4 and below, we will estimate based on our standards.)
12. Drawings, documents and their number of copies to be submitted for quotation.
    Note that, if construction is included, please specify the following items.
    1. Construction site
    2. Scope of construction (In prínciple we do not provide electricity or foundation work.)
    3. Supplies
       For example, electricity, water (if nearby), lubricants used, oxygen, acetylene, etc.

Safety Precautions

This section describes items that require special attention for the safety of the lubrication system before using this product.

The safety precautions listed here are intended to prevent injury or damage to the customer.
In addition, the precautions are divided into two categories, "Warning" and "Caution", according to what may occur if the product is handled incorrectly.
Be sure to follow all of these instructions as they include important safety information.

⚠ **Warning**	In case where the product operation is mishandled ignoring this indication, a dangeours situation may occur leading to fatal or serious injuries.
⚠ **Caution**	In case where the product operation is mishandled ignoring this indication, a dangeours situation may occur leading to injuries or property damage.

⚠ Warning

1. Turn off the power switch on the control panel before installing, removing, or repairing the product. Otherwise, the pump will automatically operate, causing the grease to leak and stain the surroundings.
2. Do not step on the lubricating equipment, piping, etc. attached to the machine as a foothold or pull as a handrail. It may cause slips and falls or damage the lubrication system.
3. Do not disassemble or remodel the lubrication equipment. Please consult us if necessary.
   In the unlikely event that maintenance work is required at the site, it should be performed by a person with specialized knowledge (Hydraulic adjuster level 2).
4. Injury may occur when handling lubricating equipment, so wear protective equipment depending on the situation.

⚠ Caution

1. When venting air from the pump, protect it with a plastic bag and so on.
   Grease (oil) mixed with air may scatter and get into your eyes or stain the surroundings.
2. Use protective equipment when handling grease. If it gets in your eyes or touches your skin, it may cause visual impairment or inflammation.
3. Carry out periodic inspections of the lubrication system (grease/oil consumption control, operation check, etc.).
   If you forget inspections, it may cause machine failure due to seizure in bearings, etc.
4. Use the product within the rated specifications and the usable environmental conditions.
   Using the product outside of the rated specifications or in a special atmosphere (next to fire, explosive atmosphere, etc.) may cause mechanical failure or fire.

Point of contact

DAIKIN LUBRICATION PRODUCTS & ENGINEERING CO., LTD.

https://www.daikin-lubrication.co.jp/en/